ECE 1101L: Lab 9 Simulation

Introduction: For this lab we will be using simulation software to get and measure our values. It is important to know how to manage this simulation software because these will be something we use in the real world so gaining these skills now is a must.

Circuit 1

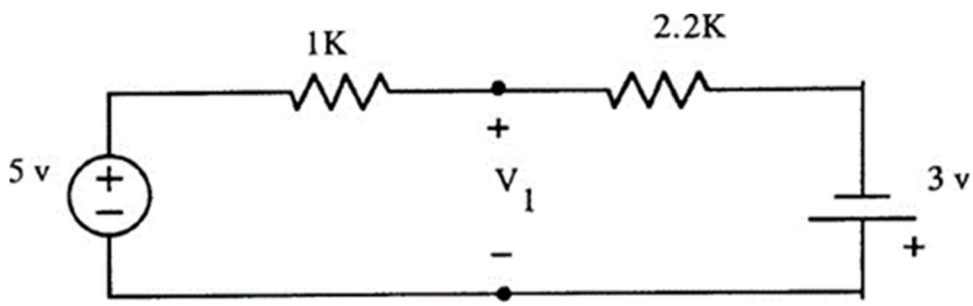

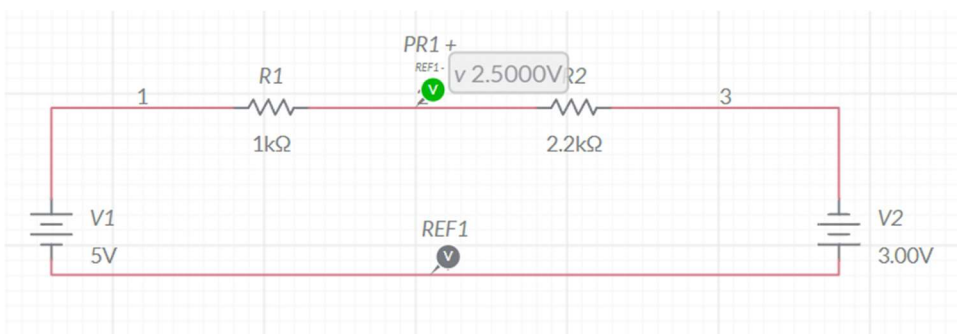

V1=2.5V

Circuit 2

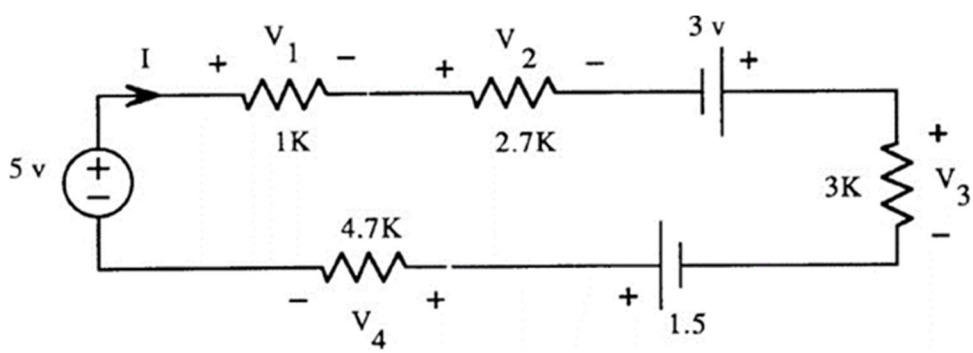

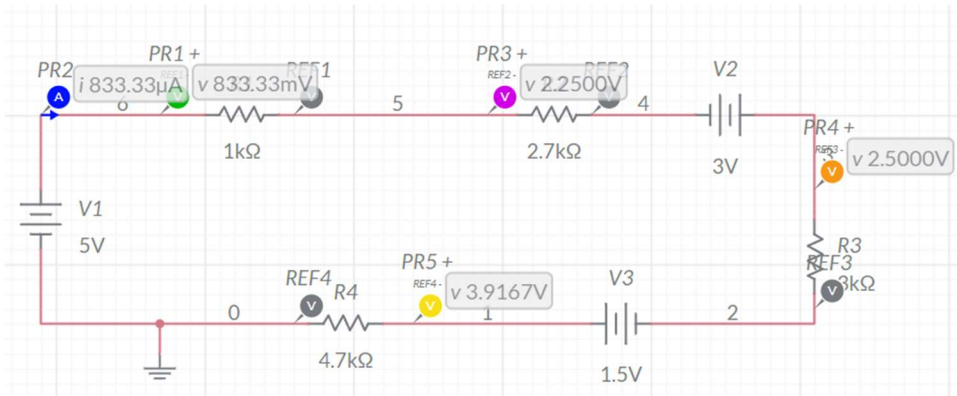

I=0.83mA, V1=0.83V, V2=2.25V, V3=2.5V, V4=3.916V

KVL: -5+0.83+2.25-3+2.5-1.5+3.9=0

-9.5+9.5=0

0=0 **KVL Satisfied**

Circuit 3

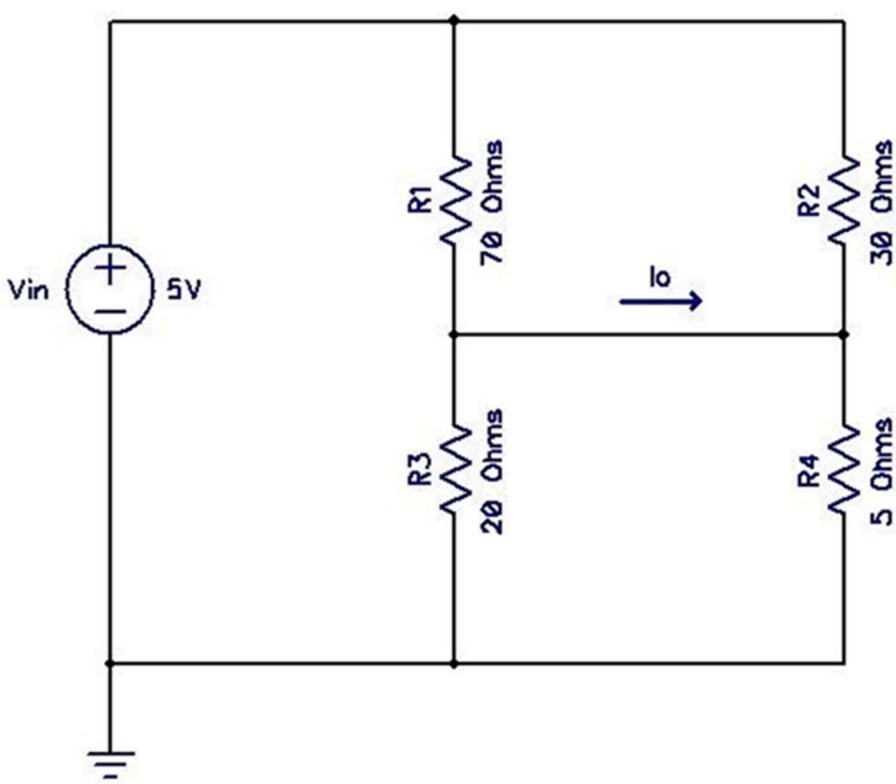

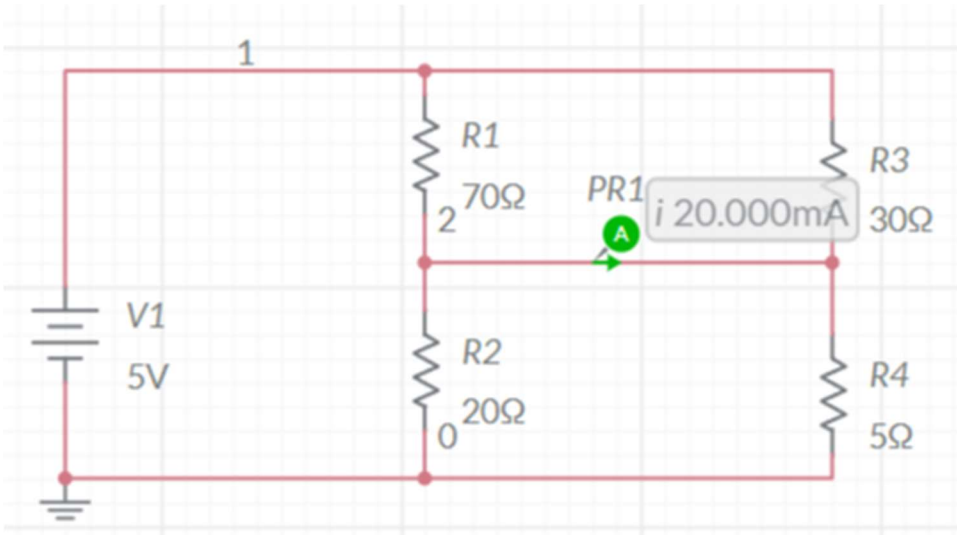

Io=20mA

Circuit 4

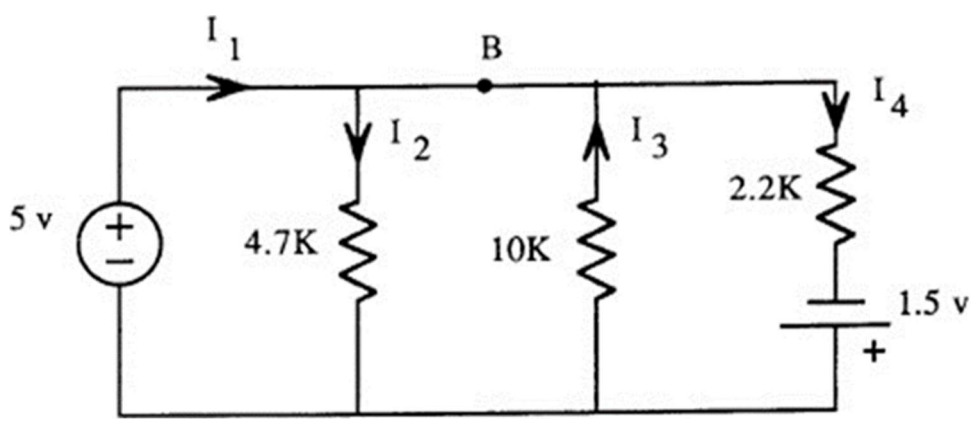

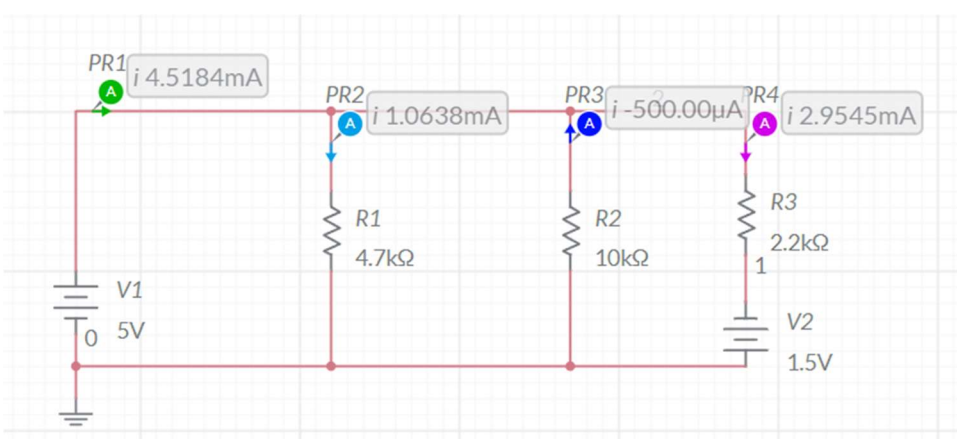

I1=4.52mA, I2=1.06mA, I3=-0.5mA, I4=2.95

KCL: I1+I3=I2+I4

4.02=4.01 **KCL Satisfied**

Circuit 5

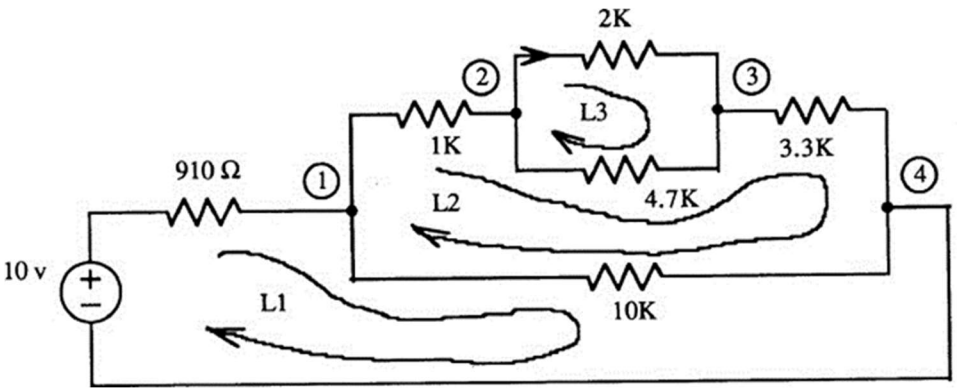

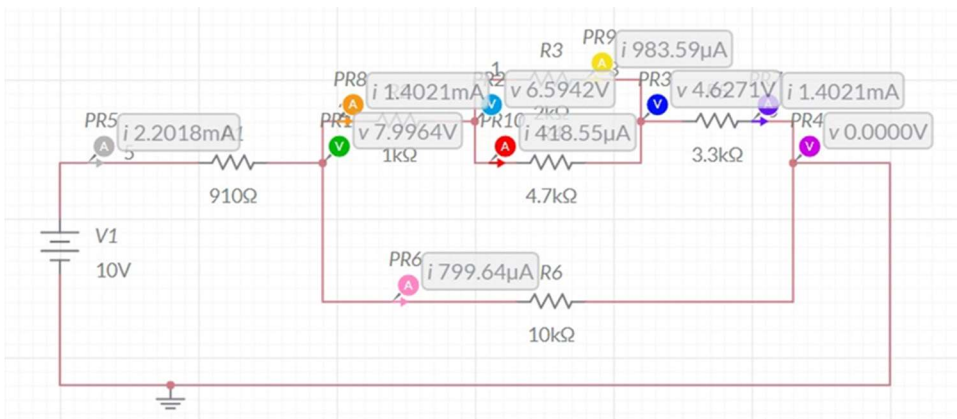

KCL: I1=I2+I3, I2=I4+I5, I6=I4+I5=I2

KVL: i4R4-i5R5=0

1.97-1.97=0

Circuit 6

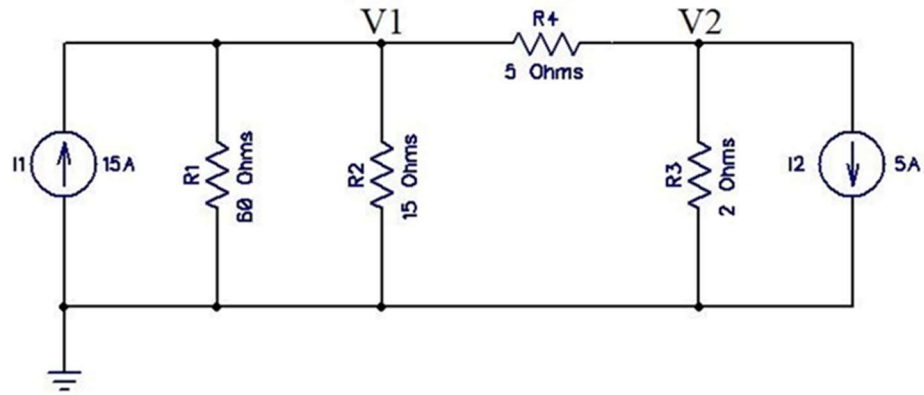

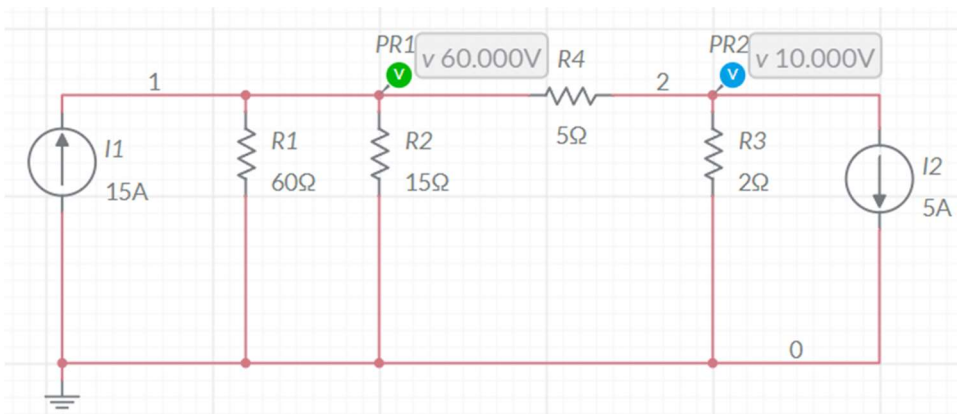

V1=60V, V2=10V

Circuit 7

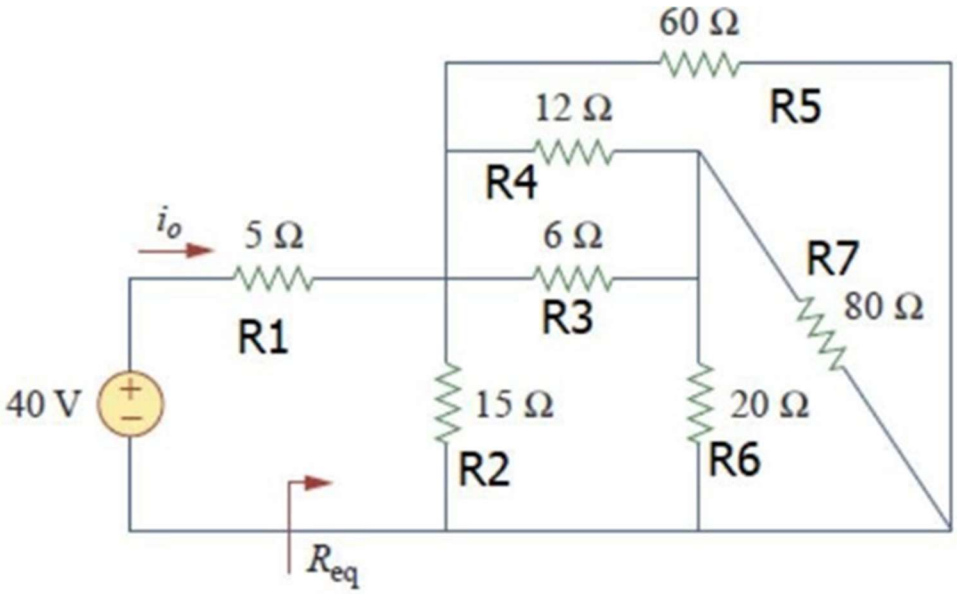

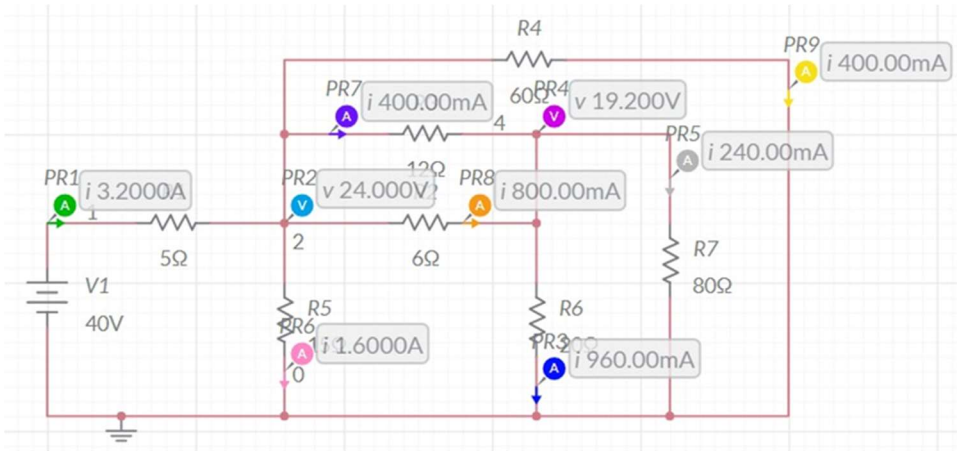
R4
PR9
i 400.00mA
PR7
i 400.00mA
60Ω
PR4
v 19.200V
4
PR5
i 240.00mA
PR1
i 3.2000A
PR2
v 24.000V
12Ω
PR8
i 800.00mA
1
2
5Ω
6Ω
R7
80Ω
V1
40V
R5
R6
PR6
i 1.6000A
PR3
i 960.00mA
0

Circuit 8

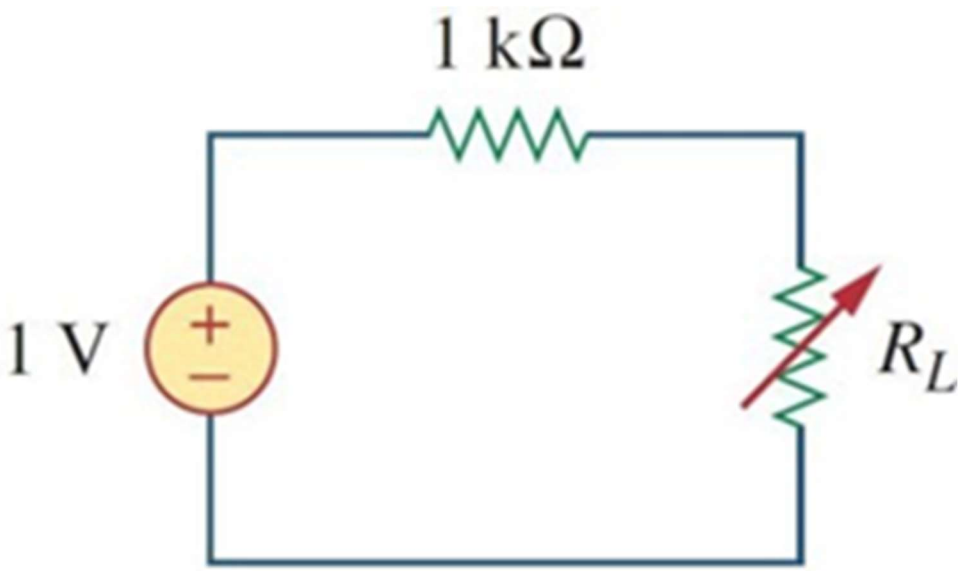
1 kΩ
1 V
R_L

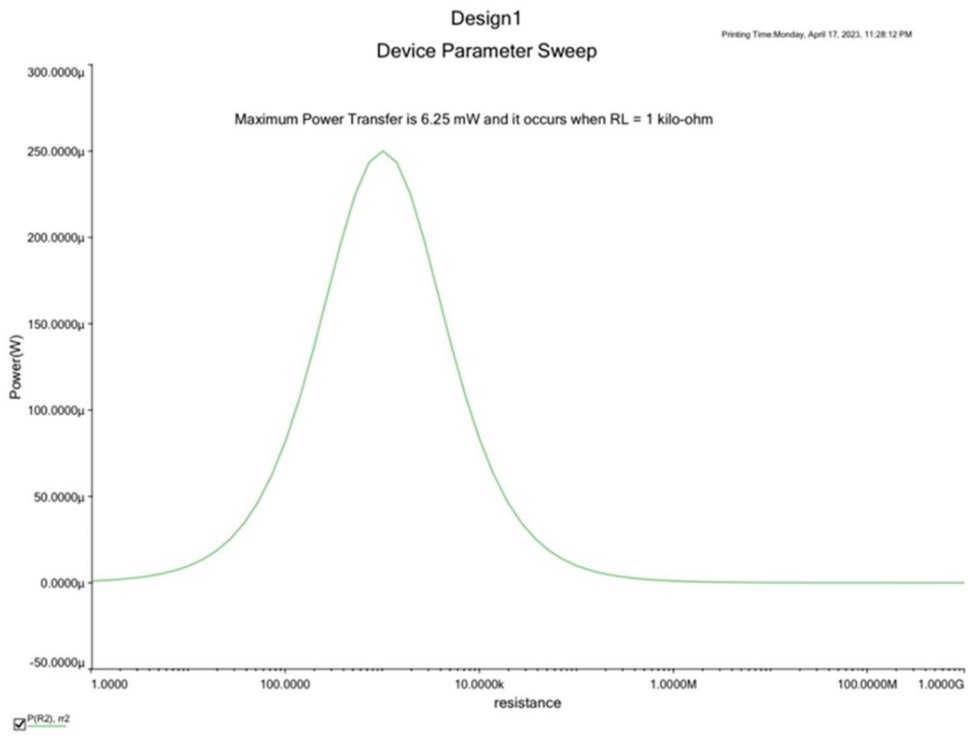
Design1
Device Parameter Sweep
Printing Time:Monday, April 17, 2023, 11:28:12 PM
Maximum Power Transfer is 6.25 mW and it occurs when RL = 1 kilo-ohm
Power(W)
300.0000µ
250.0000µ
200.0000µ
150.0000µ
100.0000µ
50.0000µ
0.0000µ
-50.0000µ
1.0000
100.0000
10.0000k
1.0000M
100.0000M
1.0000G
resistance
P(R2), nr2

Circuit 9

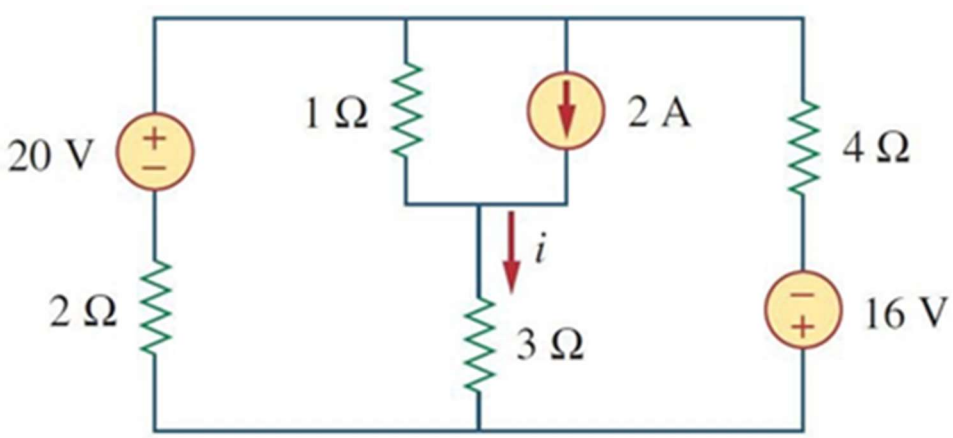
20 V
1 Ω
2 A
4 Ω
i
2 Ω
3 Ω
16 V

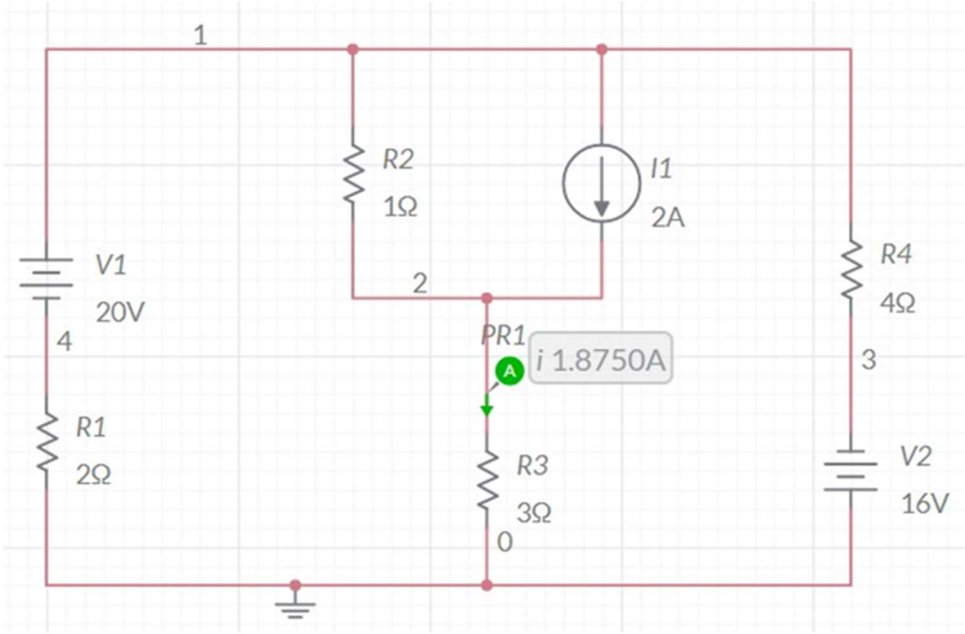

PR3=Ri^2=(3)(1.875A)^2=10.55W

Circuit 10

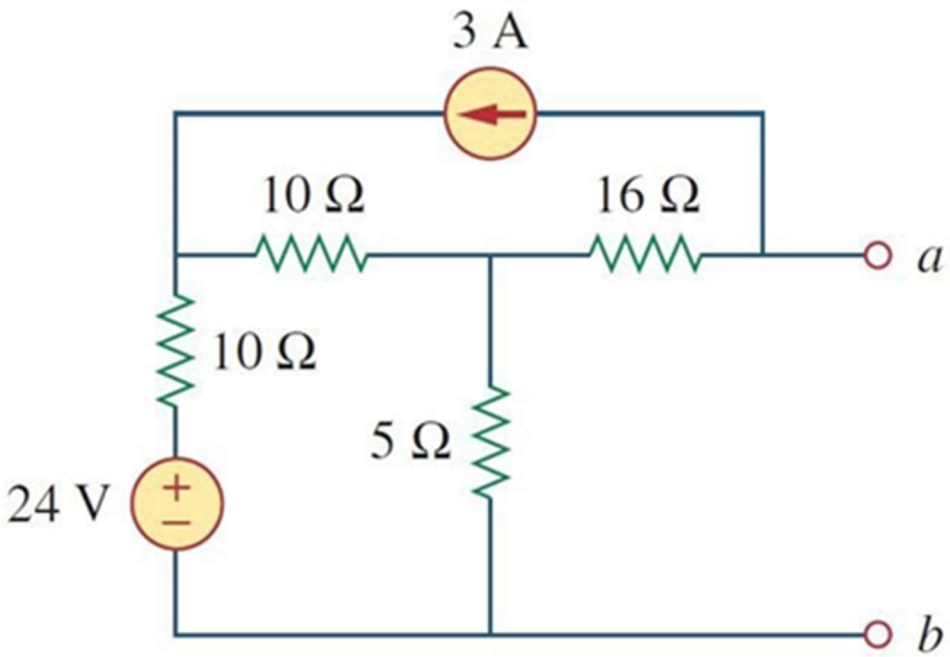

Vth=-49.2V, Rth=20 ohm

Circuit 11

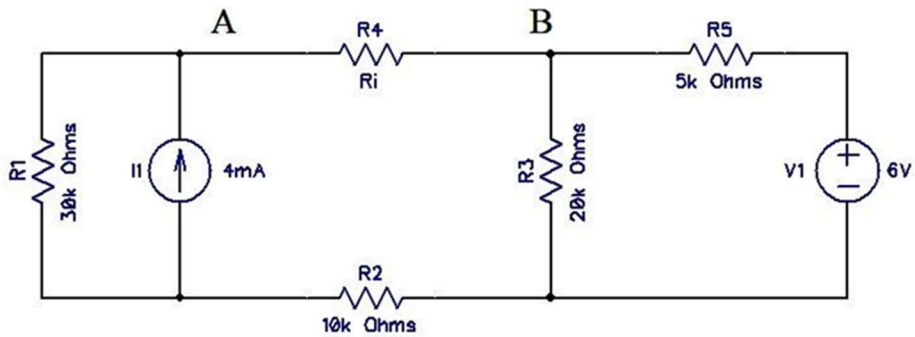

a.

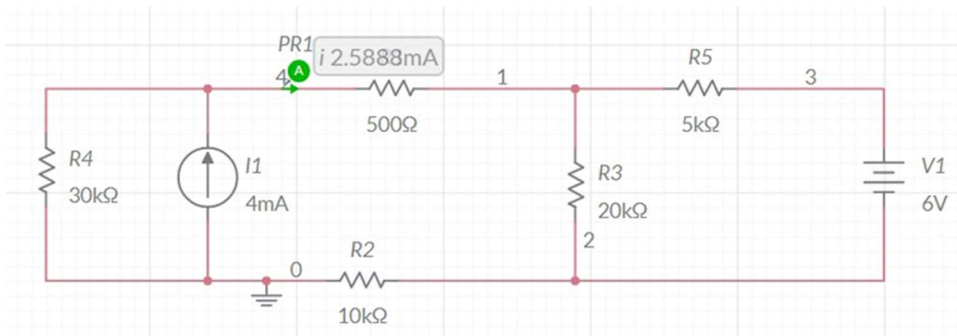

b.

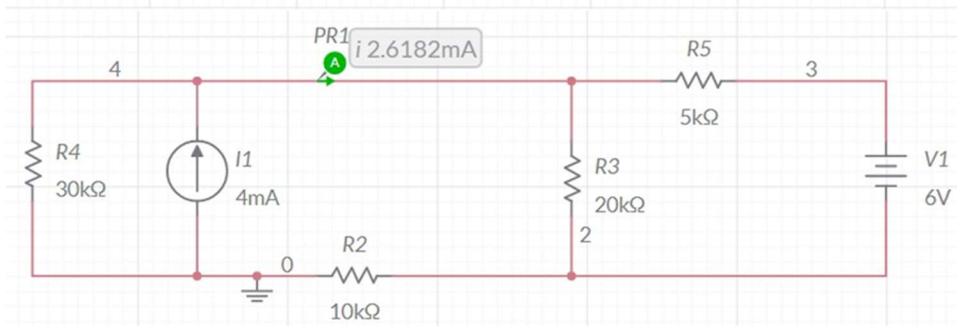

Explanation: For this lab I used Multisim to simulate all my circuits. I built the circuits using voltage sources and resistors with varying values. To measure values Multisim had voltage and current probes which would display the values at the given spot.

Conclusion: In conclusion this lab went really well. Even though I wasn't building physical circuits it taught me how to gather important data and theoretical values with different circuit scenarios.